Fisher&Paykel appliances

customercare™

Fisher&Paykel

Parts Manual

DishDrawer®

DD60SCTX7 FP AA

Product Code: 80765-A

AA

3 FRONT PANELS/CONTROLS

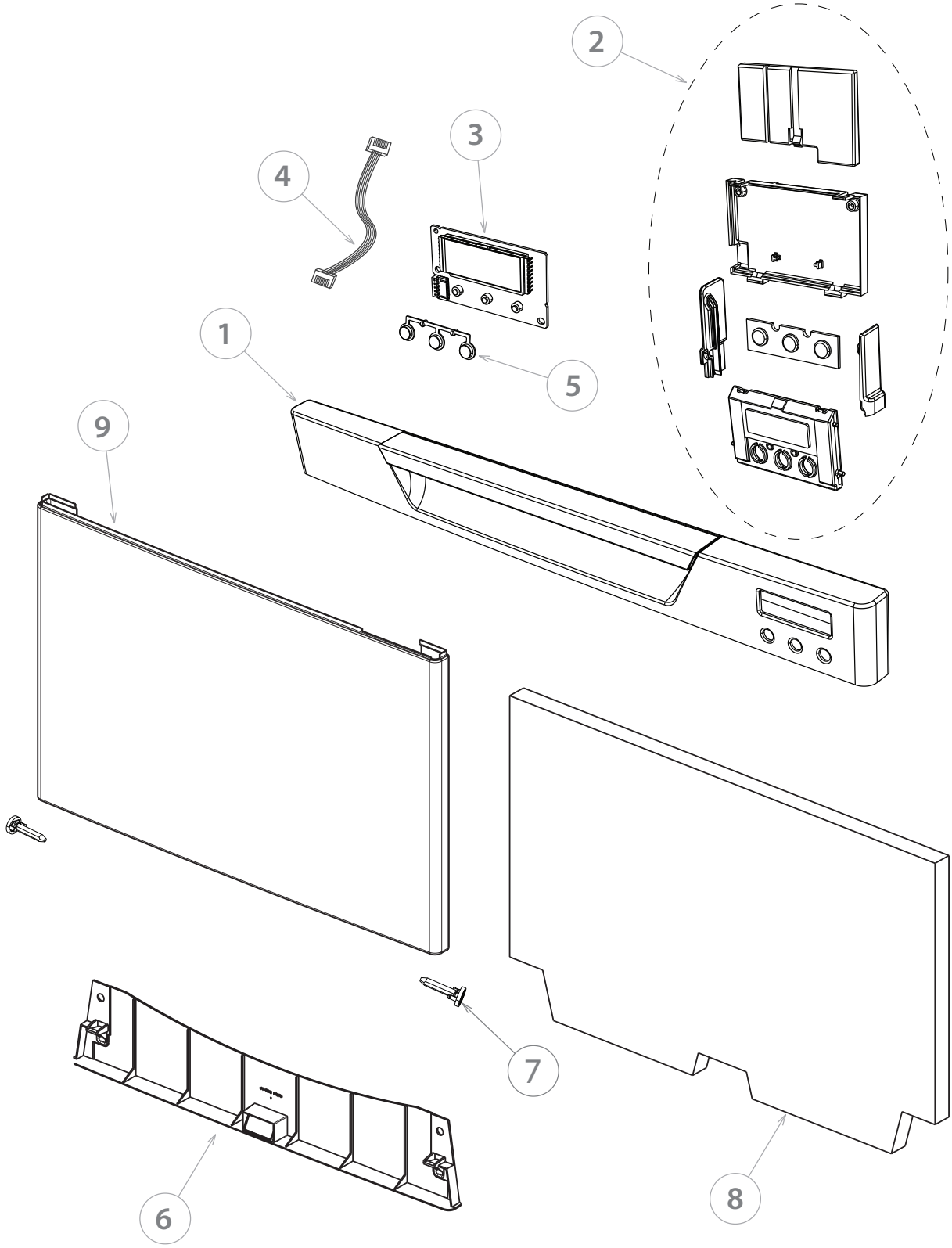

DWG 002569

5 CABINET ASSEMBLY

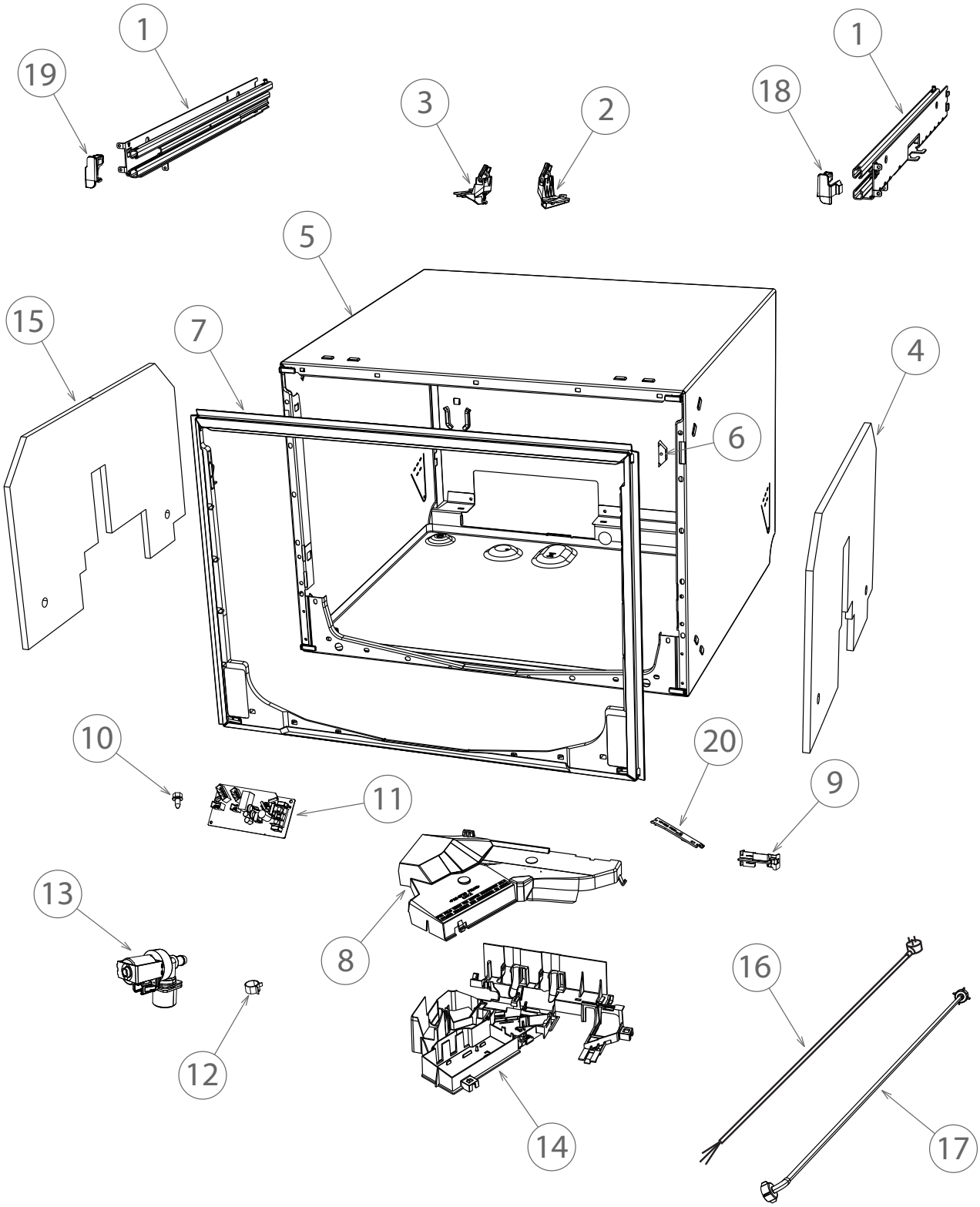

DWG 002563

9 LID & LINK ASSEMBLY

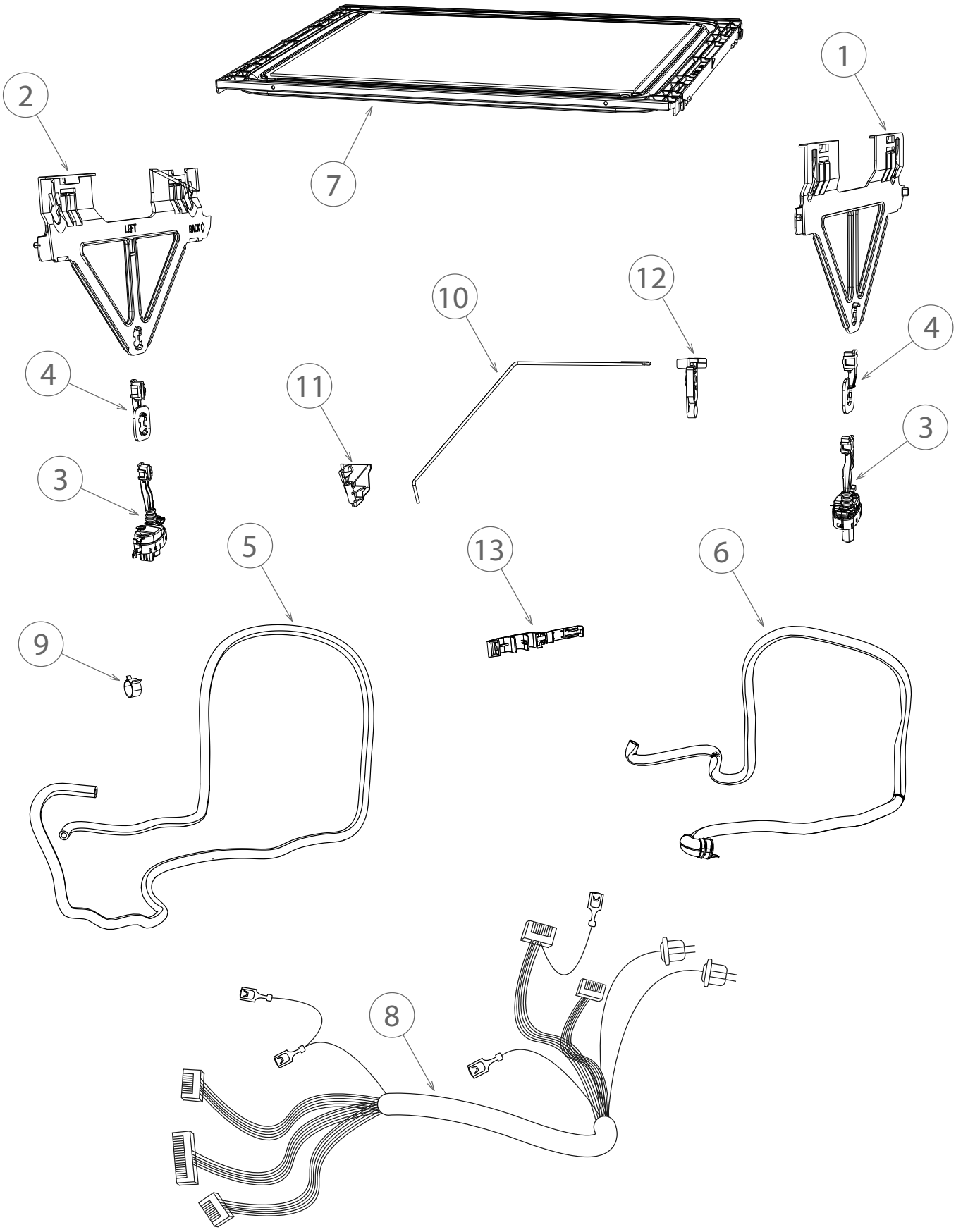

DWG 002564

11 TUB & COMPONENTS

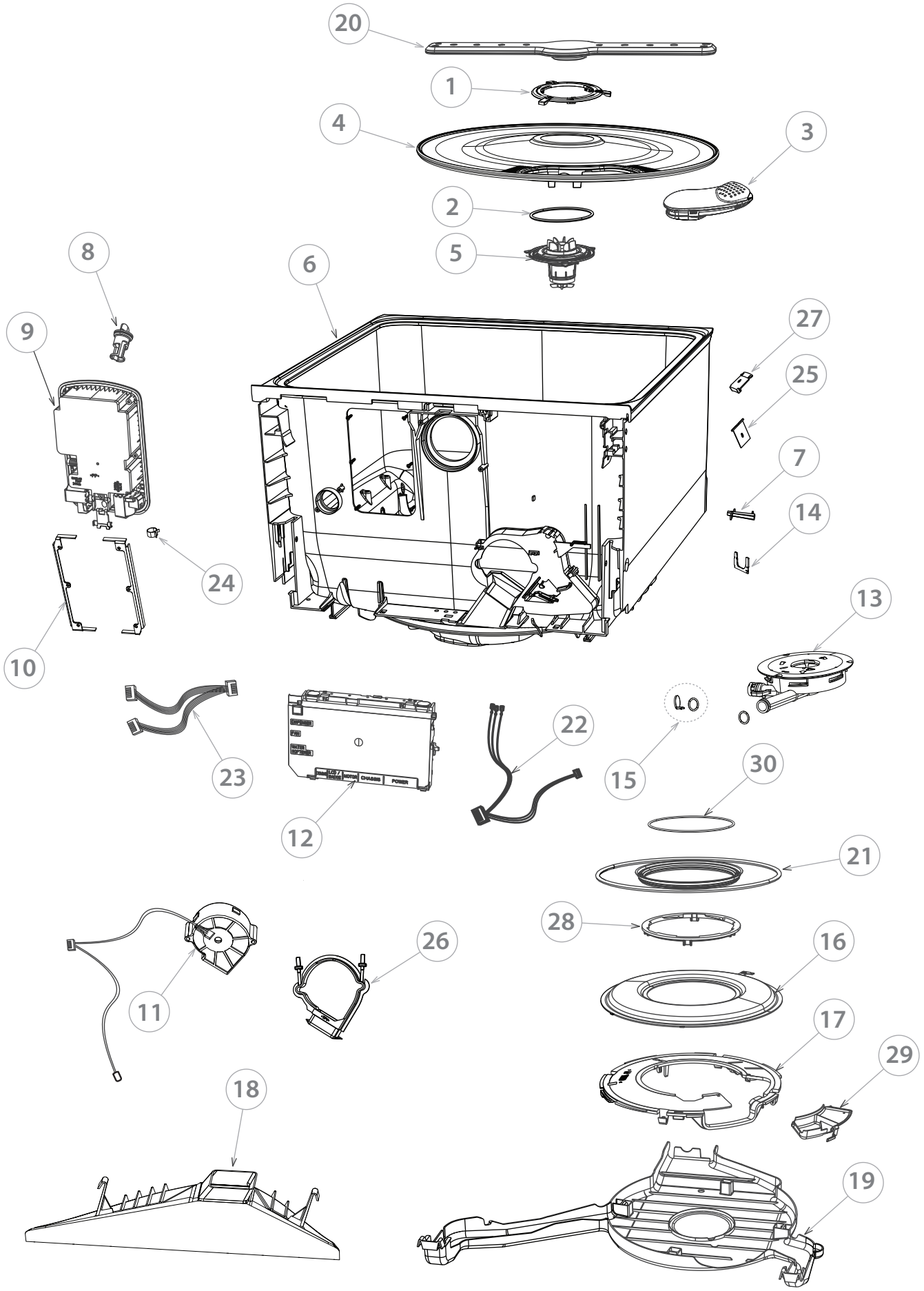

DWG 002571

BASKET & RACKS

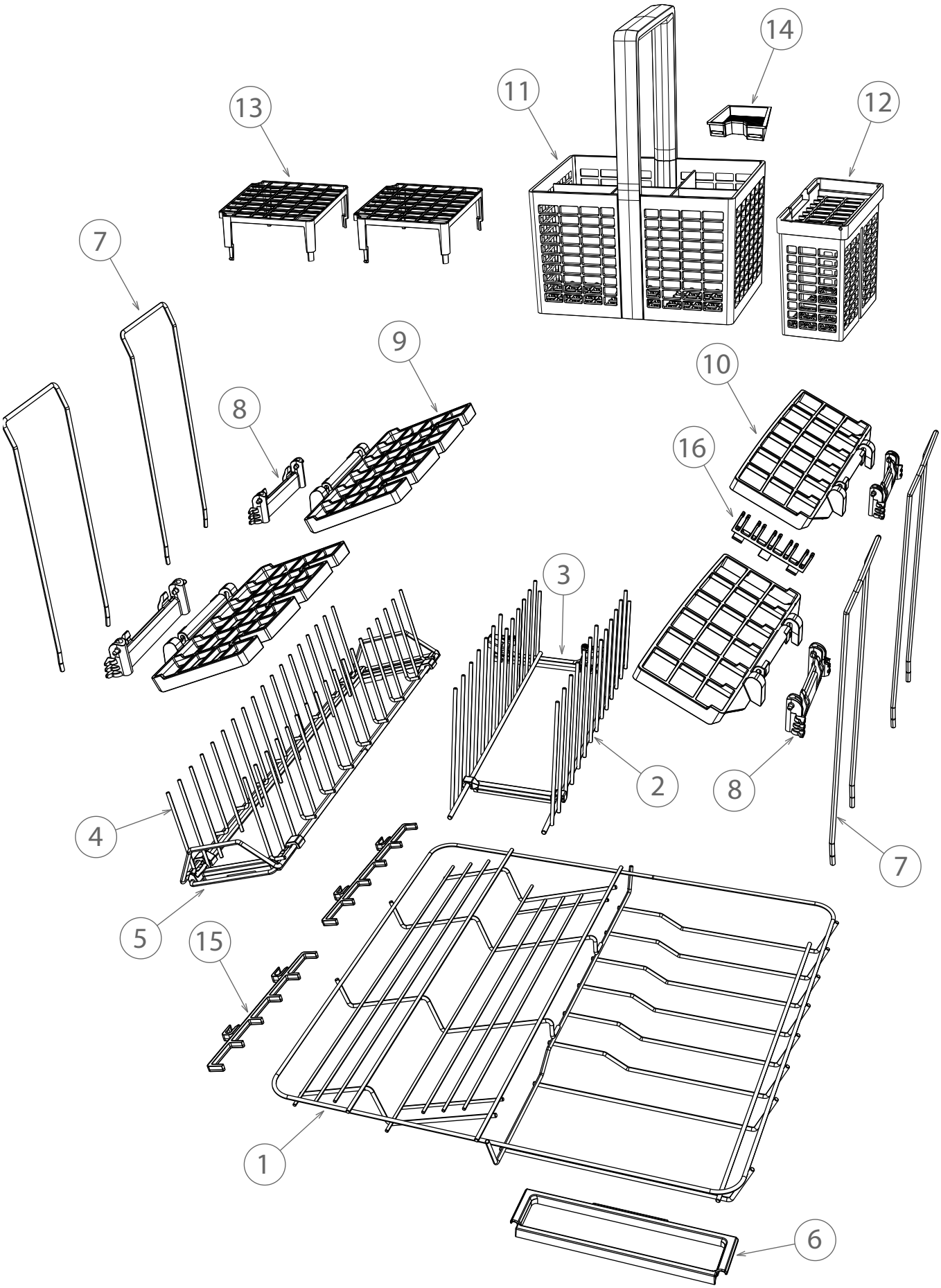

DWG 002566

INSTALLATION COMPONENTS

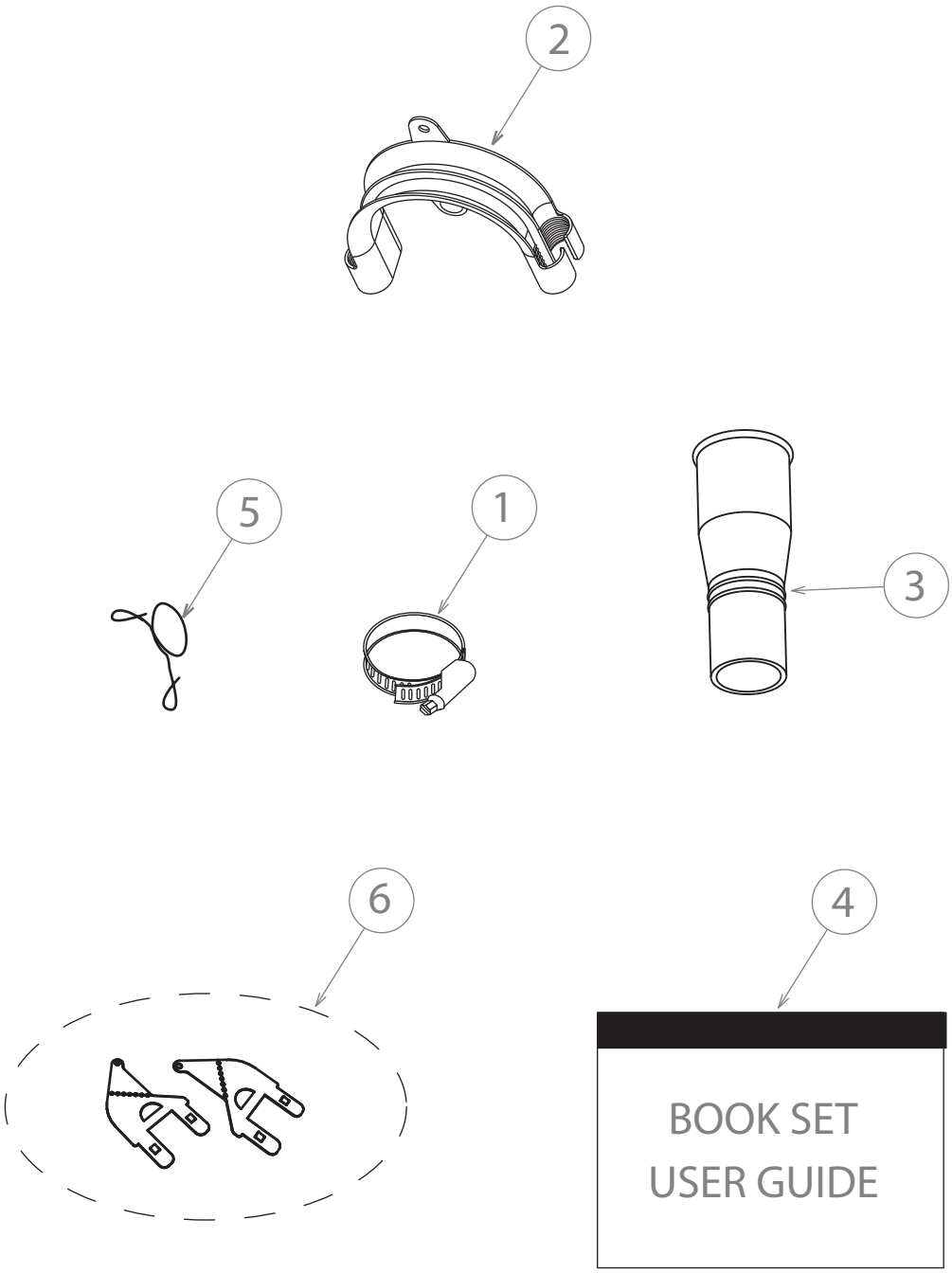

DWG 002603